Genesys 7.6

Instant Messaging

Solution Guide

About Genesys

Genesys Telecommunications Laboratories, Inc., a subsidiary of Alcatel-Lucent, is 100% focused on software for call centers. Genesys recognizes that better interactions drive better business and build company reputations. Customer service solutions from Genesys deliver on this promise for Global 2000 enterprises, government organizations, and telecommunications service providers across 80 countries, directing more than 100 million customer interactions every day. Sophisticated routing and reporting across voice, e-mail, and Web channels ensure that customers are quickly connected to the best available resource—the first time. Genesys offers solutions for customer service, help desks, order desks, collections, outbound telesales and service, and workforce management. Visit www.genesyslab.com for more information.

Each product has its own documentation for online viewing at the Genesys Technical Support website or on the Documentation Library DVD, which is available from Genesys upon request. For more information, contact your sales representative.

Notice

Although reasonable effort is made to ensure that the information in this document is complete and accurate at the time of release, Genesys Telecommunications Laboratories, Inc., cannot assume responsibility for any existing errors. Changes and/or corrections to the information contained in this document may be incorporated in future versions.

Your Responsibility for Your System's Security

You are responsible for the security of your system. Product administration to prevent unauthorized use is your responsibility. Your system administrator should read all documents provided with this product to fully understand the features available that reduce your risk of incurring charges for unlicensed use of Genesys products.

Trademarks

Genesys, the Genesys logo, and T-Server are registered trademarks of Genesys Telecommunications Laboratories, Inc. All other trademarks and trade names referred to in this document are the property of other companies. The Crystal monospace font is used by permission of Software Renovation Corporation, www.SoftwareRenovation.com.

Technical Support from VARs

If you have purchased support from a value-added reseller (VAR), please contact the VAR for technical support.

Technical Support from Genesys

If you have purchased support directly from Genesys, please contact Genesys Technical Support at the following regional numbers:

Region	Telephone	E-Mail
North and Latin America	+888-369-5555 or +506-674-6767	support@genesyslab.com
Europe, Middle East, and Africa	+44-(0)-1276-45-7002	support@genesyslab.co.uk
Asia Pacific	+61-7-3368-6868	support@genesyslab.com.au
Japan	+81-3-6361-8950	support@genesyslab.co.jp

Prior to contacting technical support, please refer to the *Genesys Technical Support Guide* for complete contact information and procedures.

Ordering and Licensing Information

Complete information on ordering and licensing Genesys products can be found in the ***Genesys 7 Licensing Guide*.**

Released by

Genesys Telecommunications Laboratories, Inc. www.genesyslab.com

Document Version: 76g_sg-InstMsg_12-2008_v7.6.001.04

Table of Contents

List of Procedures

Preface

Welcome to the *Genesys 7.6 Instant Messaging Solution Guide.* The Genesys Instant Messaging (IM) Solution is made possible in a number of ways, including something as simple as enabling agent DNs in your contact center to handle instant messages after they arrive at your Genesys SIP Server.

Deploying the IM Solution requires you to configure various possible Genesys products; this guide simplifies the configuration process by consolidating IM configuration information into one location. The guide starts with an overview of the IM Solution and continues with step-by-step instructions for configuring the applications and components that are required to run an IM 7.6 scenario.

This document is valid only for the 7.6 release(s) of this solution.

Note: For versions of this document created for other releases of this product, please visit the Genesys Technical Support website, or request the Documentation Library DVD, which you can order by e-mail from Genesys Order Management at orderman@genesyslab.com.

This preface contains the following sections:

Intended Audience

This document is primarily intended for system engineers and other members of an implementation team who will install and maintain IM 7.6. This guide assumes that you have a basic understanding of:

- Computer-telephony integration (CTI) concepts, processes, terminology, and applications.
- Network design and operation.
- Your own network configurations.

This guide also assumes that:

- You are familiar with the Genesys Framework architecture and functions that support SIP Server, traditional T-Servers, and Genesys Desktop 7.6.
- You have already installed and are familiar with the individual SIP Server and Genesys Desktop (if applicable) solutions.

Chapter Summaries

In addition to this preface, this document contains the following chapters:

- Chapter 1, "Overview," on page 13, provides a high-level overview of how the component products operate to provide the IM Solution, including schematics of the IM architecture and the deployment scenarios that are supported.
- Chapter 2, "Configuring SIP Server and Other Configuration Layer Objects," on page 23, provides detailed information about configuring SIP Server, its related `Switch` object, and other Configuration Layer objects for the IM Solution.
- Chapter 3, "Delivering and Handling Instant Messages," on page 33, provides insight into how to set capacity rules, create a routing strategy, and work with your agent desktop application to handle instant messages.
- Chapter 4, "Instant Messaging in the Logs," on page 45, offers a peek at how SIP Server handles instant messages by exposing and commenting on a snippet from its logs.

Related Resources

This guide assumes that you have already installed and configured some of the component products listed below, depending on the IM solution you intend to implement.

SIP Server

Genesys SIP Server is an essential component of the Genesys IM Solution. Consult this additional resource as necessary:

- *Framework 7.6 SIP Server Deployment Guide*, which provides architectural information, instructions on how to install and configure SIP Server, configuration option descriptions, and other related information. "Configuring Microsoft Live Communication Server" in that Guide also addresses connectivity with Microsoft Live Communication Server (LCS).

Note: It is particularly important to consult the *Framework 7.6 SIP Server Deployment Guide.* Not only is SIP Server required for the IM Solution, but if you intend to deploy your IM Solution by directly communicating with the SIP Server's SIP stack, that guide has the detailed information you need.

Agent Desktop Application

To implement a Genesys IM Solution you need agent desktop applications that work in a Genesys environment, and that are capable of handling text messages. The Genesys Desktop and customized desktops built with the Interaction SDK, beginning with releases 7.6.1, are IM Solution capable, as are customized agent desktops built with the Platform SDK beginning with release 7.6.0. Consult these additional resources as necessary:

- *Genesys Desktop 7.6 Deployment Guide*, which provides detailed installation and configuration instructions for Genesys Desktop.
- *Genesys SDK 7.6 Deployment* and *Developer's Guides* and *API References* (for both Platform and Interaction SDKs), which provide instructions on how to deploy and use Genesys SDKs to build applications that handle instant messaging in all its variations.
- *Platform SDK 7.6 SIP Endpoint Application Block Guide*, which comes with instructions on how to use the production-ready SIP Endpoint Application Block.

Note: The Genesys SIP Endpoint Application Block product, which is included with the Platform SDKs, also includes a SIP endpoint quickstart application that you can use for testing an instant-messaging deployment.

Stat Server

Stat Server plays an important roll in determining which agents receive IMs in your contact center. Consult these resources as necessary:

- *Framework 7.6 Stat Server Deployment Guide*, which describes how Stat Server tracks the real-time states of interaction management resources, and calculates basic measurements about the performance of contact center events and activities.
- *Stat Server 7.6.x Release Note,* which provides the latest information on how Stat Server tracks IMs and the resources that handle them.

Additional Reading

Universal Routing

- *Universal Routing 7.6 Deployment Guide,* which provides a high-level overview of Universal Routing features and functions, including product architecture, system availability, redundancy information, and deployment planning. It also provides instructions for deploying Universal Routing components, and describes how to start and stop these components once you have configured and installed them.
- *Universal Routing 7.6 Reference Manual,* which describes and defines routing strategies, Interaction Routing Designer (IRD) objects, Universal Routing Server (URS) and other server functions and options, number translation, pegs, and statistics used for routing.
- *Universal Routing 7.6 Business Process User's Guide*. This guide contains step-by-step instructions for creating interaction workflows (business processes), which direct incoming customer interactions through various processing objects. The goal is to generate an appropriate response for the customer.
- *Universal Routing 7.6 Interaction Routing Designer Help,* which describes how to use IRD to create routing strategies. It also describes the Interaction Workflow view, where you create business processes that route incoming interactions through various processing objects with the goal of generating an appropriate response for the customer.
- *Universal Routing 7.6 Routing Solutions Guide*, which contains information on the various types of routing solutions that can be implemented, including skills-based routing, business-priority routing, share agent by service level agreement routing, and cost-based routing.

Multimedia Chat

- *Multimedia 7.6 Deployment Guide*, which provides architectural information, instructions on how to install and configure Genesys Multimedia Chat, configuration option descriptions, and other related information.

Note: This form of a chat-type solution from Genesys is not discussed in detail in this guide. The Multimedia documentation covers its chat offering extensively.

Genesys

Consult these additional resources as necessary:

- *Genesys 7.6 Resource Capacity Planning Guide,* which provides guidance on how to manage Genesys products so that they can handle different kinds of media types as they apply to various Genesys-defined resources, such as DNs, e-mail, instant messaging, and more.
- *Interaction Concentrator 7.6 Deployment Guide,* which describes the architecture, configuration requirements, and installation steps for Interaction Concentrator, including information about how to make data from a Genesys IM solution available in Interaction Database (IDB).

  Note: When looking for information on instant messaging in the *Interaction Concentrator 7.6 Deployment Guide,* be aware that it refers to this feature as "SIP Chat."

- *Interaction Concentrator 7.6 Physical Data Model* for your RDBMS, which describes the structure of the database and IDB tables.
- *Framework 7.6 Deployment Guide*, which describes how to configure, install, start, and stop Framework components.
- *Framework 7.6 Configuration Options Reference Manual*, which provides descriptions of configuration options for other Framework components.
- *Framework 7.6 Configuration Manager Help*, which describes how to use Configuration Manager.
- *Genesys 7 Migration Guide*, also on the Genesys Documentation Library DVD, which contains a documented migration strategy from Genesys product releases 5.x and later to all Genesys 7.x releases. Contact Genesys Technical Support for additional information.
- *Genesys 7 Events and Models Reference Manual*, which contains the T-Library API, information on `TEvents`, and an extensive collection of call models.
- *Genesys Technical Publications Glossary,* which ships on the Genesys Documentation Library DVD and which provides a comprehensive list of the Genesys and CTI terminology and acronyms used in this document.
- The Release Notes and Product Advisories for this product, which are available on the Genesys Technical Support website at `http://genesyslab.com/support`.

Information on supported hardware and third-party software is available on the Genesys Technical Support website in the following documents:

- *Genesys 7 Supported Operating Systems and Databases*
- *Genesys 7 Supported Media Interfaces*

Genesys product documentation is available on the:

- Genesys Technical Support website at `http://genesyslab.com/support`.

- Genesys Documentation Library DVD, which you can order by e-mail from Genesys Order Management at orderman@genesyslab.com.

Making Comments on This Document

If you especially like or dislike anything about this document, please feel free to e-mail your comments to Techpubs.webadmin@genesyslab.com.

You can comment on what you regard as specific errors or omissions, and on the accuracy, organization, subject matter, or completeness of this document. Please limit your comments to the information in this document only and to the way in which the information is presented. Speak to Genesys Technical Support if you have suggestions about the product itself.

When you send us comments, you grant Genesys a nonexclusive right to use or distribute your comments in any way it believes appropriate, without incurring any obligation to you.

Chapter

1 Overview

This chapter provides an overview of the Genesys Instant Messaging (IM) Solution. Although there is more than one way to implement chat-type capabilities in Genesys environments, the IM Solution refers to instant messages handled by SIP Server and delivered to a routing point. Other text-messaging options are described only briefly in this *Solution Guide.*

This chapter contains the following sections:

Note: This document assumes that you can successfully install and configure the individual components that make up the pieces of a given instant messaging offering. This document provides the additional configuration information you need to have those components carry out instant messaging.

What Is an Instant Messaging Solution?

Genesys Instant Messaging (IM) is the name of a solution that also describes the function of that solution. Implementing Genesys IM allows individual parties to communicate with one another in real time by the exchange of text. In a Genesys environment, implementing this solution (essentially, adding IM to the media your agents handle) requires very little additional configuration after you have installed and configured the constituent components of the solution.

Defining IM

The technology of delivering an instant message can take many forms. Genesys offers a few of these technologies. For the purposes of this document, however, the Genesys IM Solution refers to text messages handled by Genesys SIP Server (using *SIMPLE,* SIP Instant Messaging and Presence Leveraging Extensions, in session mode), and delivered to a routing point that is configured on the Genesys Configuration Layer `Switch` object associated with that SIP Sever. From there, Universal Routing Server (URS) and Stat Server use a routing strategy, agent DN configuration, capacity rules, and awareness of agent availability to determine how SIP Server should deliver instant messages to the agent desktop.

Note: While Genesys Multimedia Chat also provides an instant messaging experience, it is not the focus of this document.

Genesys supports instant messaging as a type of media in a Genesys environment similarly to other media you might experience, allowing, for instance, supervisor monitoring, transferring, conferencing, suggested responses, and other familiar features related to the contact center.

Agent Desktop Considerations

Genesys IM, by definition, involves SIP Server. But with regard to your use of an agent desktop, however, your deployment can take two general forms:

- SIP inbound instant messages handled by SIP Server and delivered to an agent DN at the Genesys Desktop (with or without Genesys Desktop SIP Endpoint running).
- SIP inbound instant messages handled by SIP Server and delivered to an agent DN at a customized agent desktop. For Genesys IM purposes, this desktop only needs to be able to handle text associated with the interaction, and can be built with or without a SIP endpoint. This agent desktop can be built with Genesys SDK software or a third-party set of tools. (There are many ways to build an IM-enabled agent desktop with the Genesys SDKs. For options, see the related resources in “Agent Desktop Application” on page 9.)

  Note: The option to use a SIP endpoint is related to the protocols that the IM Solution supports. See “Supported Protocols: SIP and T-Library” on page 17 for details.

Other Chat Offerings

In contrast to the IM Solution, the Genesys Multimedia Chat offering works with instant messages that are entered at a chat window exposed on a company web site (using HTTP-based chat clients). Multimedia Chat transmits these messages through Chat Server and Interaction Server to agents working in a Genesys contact center.

It is also possible to implement customized text-message communication inside the contact center using a communication DN configured for your switch in the Configuration Layer. This form of messaging, however, does not permit any of the call-control features associated with the Genesys IM Solution.

This document will focus on Genesys IM as SIP Server-based. The other instant messaging deployments are described thoroughly in the documentation for their products.

Features and Benefits

The Genesys IM Solution allows your customers to reach you through an additional media channel (beyond voice or e-mail). It can also provide peer-to-peer communication in your contact center. The IM Solution supports the following specific features and benefits:

- Industry-standard instant messaging protocols and tools.
- Handling instant messages as interactions (use of standard responses, for instance), including call-type controls such as the following:
  - Initiate/complete transfers.
  - Initiate/complete conferences.
  - Place on hold and retrieve interactions.
  - Initiate instant messages.
  - Perform single-step transfers.
- Interaction supervision, including the following:
  - Silent monitoring.
  - Whisper coaching.
  - Barge-In.
  - Subscription and intrusion through `MonitorNextCall`.
  - Assistance mode.
- Multiple simultaneous instant messages for a given agent.
- Genesys Capacity Rules.
- SIP Server's use of the following treatments on a routing point:
  - `Play Announcement`.
  - `Collect Digits`.
  - `Play Announcement and Collect Digits`.

New in This Release

While an IM or chat experience is not new to Genesys (Multimedia Chat, communication DNs, and SIP Server's SIP stack instant messaging have been available), this initial release of the IM Solution offers an additional protocol for delivering instant messages to agents. SIP Server can now pass the text of the instant messages in an extension to T-Library's `EventPrivateInfo`. Specifically, this allows you to deploy Genesys Desktop as part of your IM deployment. Agents logged in to DNs enabled for instant messaging at the

Genesys Desktop can now have SIP-initiated instant messages routed to them over T-Library.

Component Products

You can deploy instant messaging in a number of ways. The following product/server integration scenario is the primary method:

- Genesys SIP Server as part of the Genesys Framework, in conjunction with one of the following: Genesys Desktop; a customized agent desktop built with the Genesys SDKs; or even a third-party IM interface. Furthermore, you have the option of using a SIP endpoint as part of your agent desktop, or allowing the desktop to receive its messages from the T-Library event, as the Genesys Desktop can.
- Genesys Stat Server.
- Universal Routing:
  - Universal Routing Server (URS).
  - Interaction Routing Designer (IRD).
- Interaction Concentrator (optional—used as data collector).
- The underlying Genesys environment for your IM solution has certain minimum release requirements. Generally, it must be at least Genesys 7.6. See the *Genesys 7 Interoperability Guide* for details.

Instant Messaging Architecture

The Genesys IM Solution supports some customization of the details of your deployment. For instance, you might use Genesys Desktop, or a customized agent desktop. Figure 1 provides a basic overview of the primary components you might include, and of their connectivity.

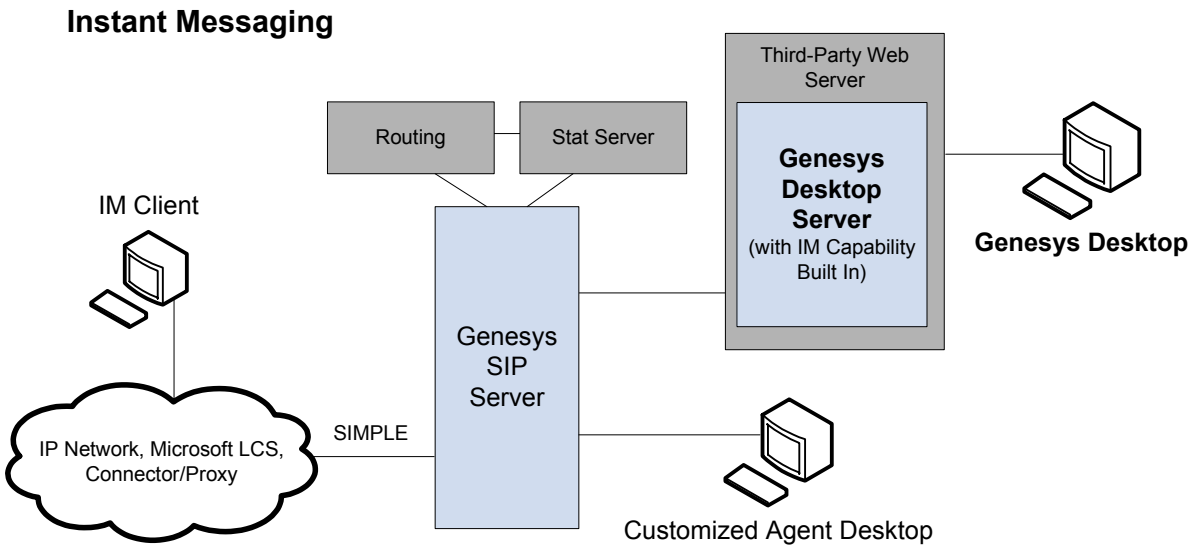

Figure 1: Genesys IM Architectural Schematic

SIP Server works with URS and Stat Server to determine which agents are available for handling the instant message from an IM client.

When you include Genesys Desktop in your IM deployment, you get the additional customer-support tools you expect for an interaction of any media type, including access to your standard response library and support for supervisor monitoring. Of course, IM deployments without Genesys Desktop can still get these features, but such implementations require more extensive customization.

Whether you use the Genesys Desktop or a customized agent application, your desktop application does not need to run on a SIP endpoint because SIP Server is capable of delivering the instant message by means of T-Library (and not just the SIP stack). (See "Supported Protocols: SIP and T-Library" and Figure 2 for details.) Agent desktops that connect directly to SIP Server to take advantage of SIP Server's SIP stack need a SIP endpoint.

Supported Protocols: SIP and T-Library

Genesys SIP Server is built with both a SIP stack and the Genesys T-Library. As such, it supports both `SIMPLE` and `TLIB`, the corresponding protocols for those libraries. This means that one aspect of the Genesys IM Solution is that you do not need an agent desktop based on a SIP endpoint to work with the instant messages that SIP Server sends your agents. Agent desktop applications that are integrated into a Genesys environment and that can handle text associated with an interaction, including the Genesys Desktop, may have the ability to work with instant messages from SIP Server. As appropriate, SIP Server passes instant messages through its SIP stack or by means of the

associated `Extensions` attributes to one of the T-Library (`TLIB`) request/event pairs: `TPrivateService/EventPrivateInfo`.

Since a SIP endpoint is optional for your agent desktop, you have some flexibility when you deploy that desktop. Some of your deployment options are shown in Figure 2. SIP Server makes the text of the IM available in both the SIP and T-Library portions of its server/client messaging. See Chapter 4, "Instant Messaging in the Logs," on page 45 for details on how this is represented in SIP Sever logs. With Genesys Desktop, for instance, you can choose to use only the T-Library-based text. Generally, SIP Server communicates with your agents based on how you configure your DNs and how your desktop integrates with your SIP Server. (See "Configuring Switch Object Resources" on page 24 for details.)

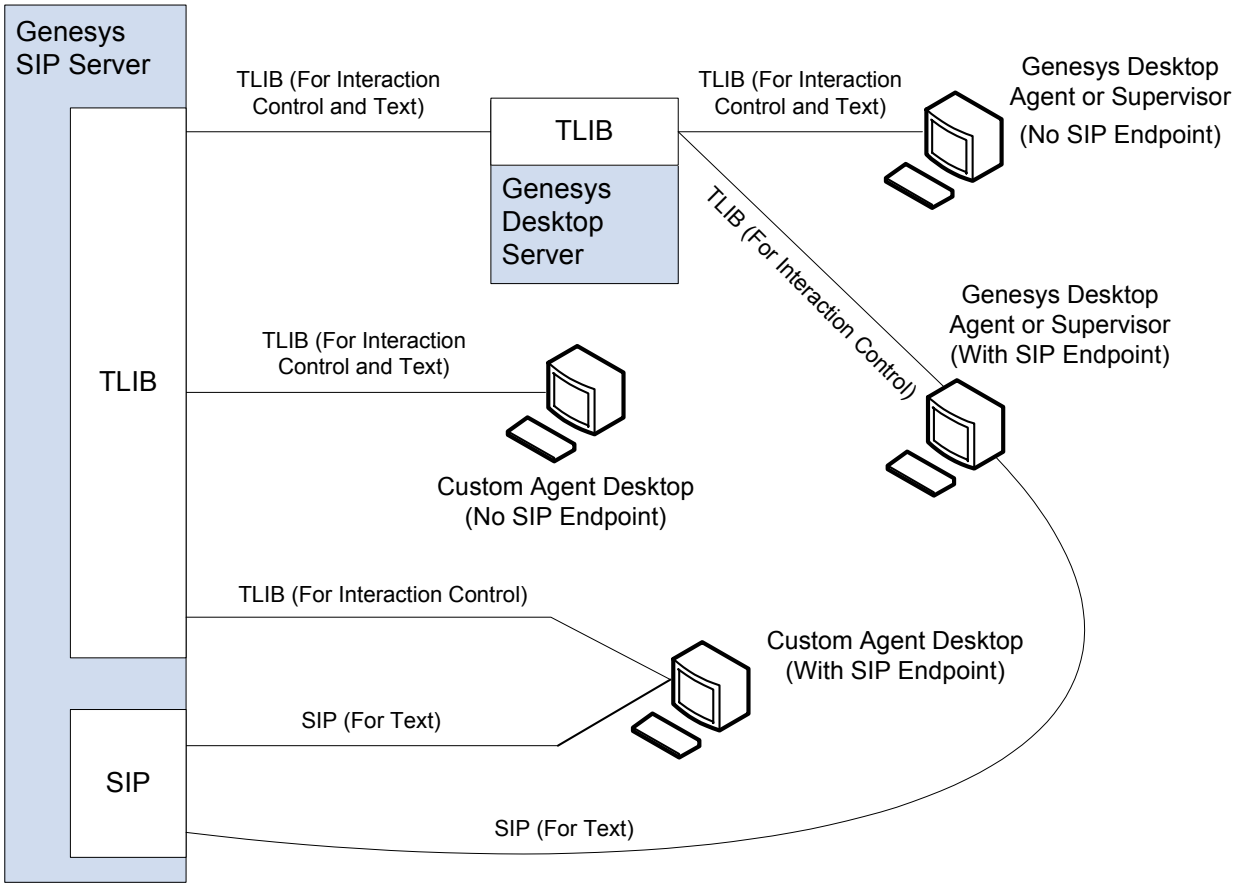

Figure 2: Agent Desktop Architectural Options for Connecting to SIP Server

Again, as Figure 2 indicates, use of a SIP-endpoint-based agent to handle your instant messages is by no means mandatory. Both SIP and `TLIB` are available for this work. The connection between the desktop and the SIP Server takes care of all the logic for handling the instant messaging, regardless of the type of agent endpoint.

This flexibility can be taken a step further. Figure 2 also shows that for a given desktop, you might have both a SIP endpoint and `TLIB`-based communication

to connect to SIP Server. In this case the desktop handles the instant messaging directly from SIP Server's SIP stack. (This is shown in two of the variations in Figure 2 on page 18.) Such scenarios give you SIP messaging between endpoints, and a `TLIB` connection to provide the agent-state awareness and the full integration of the agent into the contact center. The *Framework 7.6 SIP Server Deployment Guide* provides details on how to integrate a SIP endpoint directly with the Genesys SIP Server.

Other Ways to Handle Text Messages

The Genesys IM Solution requires SIP Server. Although this manual does not address them in detail, there are other ways to handle text messages in your contact center; primarily by using Genesys Multimedia Chat. Figure 3 shows a schematic of the Genesys Multimedia implementation for chat interactions.

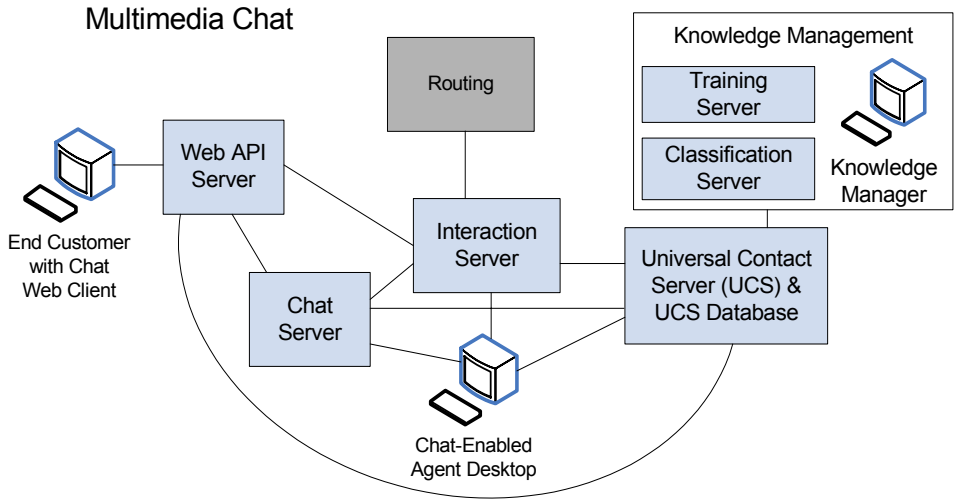

Figure 3: Genesys Multimedia Chat Architectural Schematic

Genesys Multimedia includes a chat feature that handles interactions initiated from a web interface using HTTP. This feature does not involve SIP Server, but at the agent desktop, the handling of the chat interaction is the same as that for an IM that passes through SIP Server. In the case of Multimedia Chat, however, Interaction Server (in conjunction with URS and Stat Server) handles the queuing and distribution of the interaction.

Additionally, at the Configuration Layer level, there are a few differences when enabling agents to handle an IM as opposed to a Multimedia Chat interaction. The SIP Server method uses capacity rules and DN configuration; the Multimedia Chat method relies only on capacity rules. For details on the configuration and deployment of all Multimedia products, begin with the *Multimedia 7.6 Deployment Guide.*

Supported Scenarios

The Genesys IM Solution supports the following environmental scenarios:

- Single- or multi-tenant environments.
- Genesys SIP Server.
- Genesys Desktop agents (with or without Genesys Desktop SIP Endpoint) or customized agent desktops (built with or without SIP endpoints) capable of handling text messaging.

  Note: In the case of a customized desktop, the capability of handling the text messaging might be left to a SIP endpoint, while the `TLIB`-based desktop just handles the interaction control. See "Supported Protocols: SIP and T-Library" on page 17 for details.

- The IM Solution can be connected to Microsoft Live Communication Server (LCS) to send and receive IMs. The *Framework 7.6 SIP Server Deployment Guide's* "Configuring Microsoft Live Communication Server" addresses this connectivity. Generally, with Microsoft LCS and the IM Solution connected:
  - A customer using a publicly available IM client (such as Yahoo, AOL, or MSN) or Microsoft Communicator can initiate an IM session to your contact center by selecting an appropriate contact in a "buddy" or contact list.
  - An agent using Microsoft Communicator can receive IMs delivered by the contact center software.

Summary of Solution Configuration Steps

To configure the Instant Messaging Solution in your existing Genesys environment, perform the following basic steps:

1. Install and configure SIP Server as described in the *Framework 7.6 SIP Server Deployment Guide.*
2. Using the Capacity Rules Wizard in Configuration Manager, create or modify a capacity rule that permits your agents to handle instant messages. (Add the `chat` media to the appropriate capacity rule.) See the *Genesys 7.6 Resource Capacity Planning Guide* for details.
3. Using IRD, create or modify a routing strategy (one with an appropriate routing point loaded on it) for the direction of instant messages through treatments and to agents as required by your business logic. This strategy should use media segmentation and can employ certain treatments. See "Designing a Routing Strategy for IM" on page 34 for details. Also see references to URS documentation in "Related Resources" on page 8.

4. Make it possible for instant messages to reach agents by creating or modifying DNs on the Configuration Layer `Switch` object related to your SIP Server. For more information about enabling DNs for the Instant Messaging solution, see "Configuring Switch Object Resources" on page 24.
5. To report on instant messages that arrive at, and that are worked on, in your contact center see "Reporting IM Activity in Your Contact Center" on page 38.
6. Deploy Genesys Desktop (or your customized agent desktop that can handle text exchanges). See the *Genesys Desktop 7.6 Deployment Guide* for details.

Chapter

2 Configuring SIP Server and Other Configuration Layer Objects

This chapter describes how to configure SIP Server and certain needed Configuration Layer objects for the Genesys Instant Messaging (IM) Solution. It includes the following sections:

Before You Begin

This guide assumes that you have successfully installed and configured the Genesys Framework and a SIP Server. This document provides information about specific configuration requirements to permit an existing Genesys Framework with an installed SIP Server deployment to handle instant messaging. For information about installing and configuring SIP Server itself, see the *SIP Server 7.6 Deployment Guide* and other resources listed in "Related Resources" on page 8.

The SIP Server Application Object

There are no special adjustments you need to make to your existing SIP Server `Application` object in the Configuration Layer. When installed, even in a generic fashion, SIP Server comes ready to handle instant messages.

Configuring Switch Object Resources

This section describes the configuration changes you need to make to the DNs on the Configuration Layer `Switch` object associated with the SIP Server you are using to handle instant messaging. You can implement the Genesys IM Solution to use T-Library messaging or SIP Server's SIP stack using the procedure described here. This section provides only the basic steps. For more details on how to configure SIP endpoints generally, see the *Framework 7.6 SIP Server Deployment Guide.* Also see Figure 2, "Agent Desktop Architectural Options for Connecting to SIP Server," on page 18 for a schematic on the differences in connectivity between T-Library and SIP communication.

The following sections describe how to configure `Switch` resources for the IM Solution:

- "Enabling DNs to Handle Instant Messaging"
- "Variations of DNs and Media for Agents" on page 27

See also "Configuration Options" on page 31 for additional SIP Server configuration options relevant for the IM Solution.

Enabling DNs to Handle Instant Messaging

A DN that is already configured to work as a voice resource on the `Switch` object related to your SIP Server needs very little further configuration to allow it to handle instant messaging as well. The following procedure indicates how to modify existing DNs, or create new ones to allow delivery of SIP-based or T-Library-based IMs to agent desktops.

Procedure: Configuring DNs to handle instant messaging

Purpose: For the `Switch` object related to your SIP Server, to create or modify existing DNs of type `Extension` with the proper settings to allow delivery of SIP-based or T-Library–based IM interactions to the agent desktop.

Prerequisites

- As part of your SIP Server deployment, you must have created a related `Switch` object in the Configuration Layer. You may have already configured DNs of type `Extension` on that object as part of the SIP Server deployment (in which case you can modify those DNs to permit IM handling). If you only want to add instant-messaging capabilities to those DNs, simply ignore the creation-of-DNs step in this procedure.

Start of procedure

1. In the Configuration Layer, locate your SIP Server's `Switch` object that will have the DNs capable of handling instant messaging.
2. Open the `DNs` folder for that object, and create as many DNs of type `Extension` as you need to allow agents to handle IMs. (If you only want to modify existing DNs to enable them to handle instant messaging as well as voice, skip this step.)
3. Open the `Annex` tab of an `Extension` DN that you want to enable for IM.
4. Either create or open the existing `TServer` section on that `Annex` tab.
5. Inside the `TServer` section, add the following three options and assign the corresponding appropriate values:

Table 1: Options for Enabling T-Library IM on DNs

Option Name	Valid Values	Brief Description
multimedia	true or false	When set to `true`, indicates that the DN is capable of handling IM interactions.
sip-signaling-chat	true or false	When set to `true`, forces the use of SIP to handle the text of the instant message. When set to `false`, forces T-Library, instead of SIP, to handle the text of the instant message.
voice	true or false	When set to `true`, indicates that this DN is to be allowed to handle SIP voice interactions as well as instant messages. When set to `false`, indicates that this DN is for IM only.

See the "Configuration Options" on page 31 for full details and some use cases for these three options.

Your DNs for handling IMs can be configured a number of ways, depending on the architecture of your environment. "Variations of DNs and Media for Agents" on page 27 details a few of these scenarios. Figures 4 and 5 provide two examples of how the DN options themselves might look.

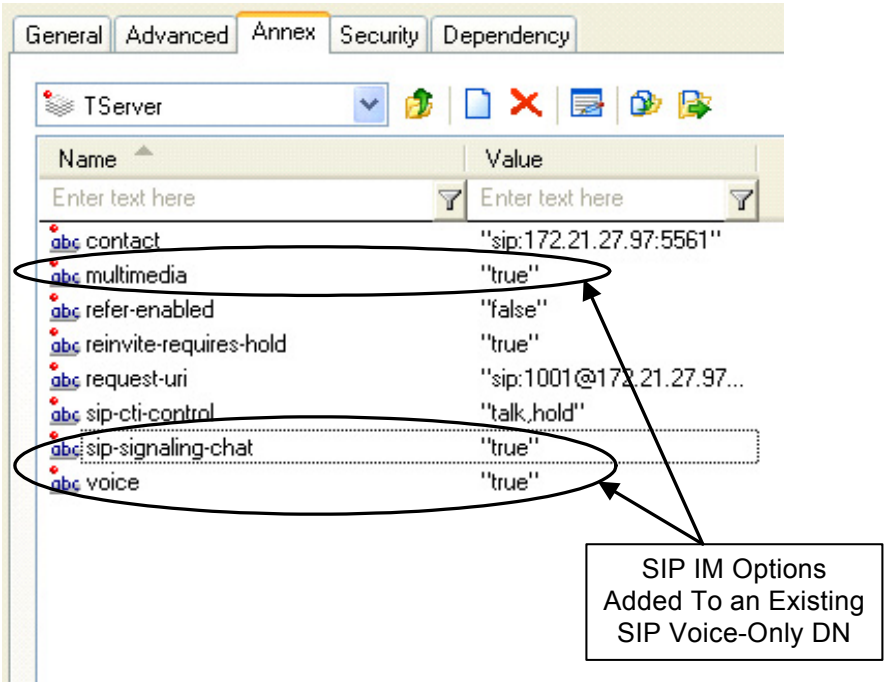

Figure 4: Sample of Options on a DN Handling SIP Voice and SIP IM

Figure 4 shows a DN that handles SIP voice (the `voice` option is set to `true`) plus SIP instant messaging (the `sip-signaling-chat` option is set to `true`). Figure 5 shows what that same `DN` object's options might look like if you intended for it to handle SIP instant messaging only (the `sip-signaling-chat` option is set to `true`, and the `voice` option is set to `false`).

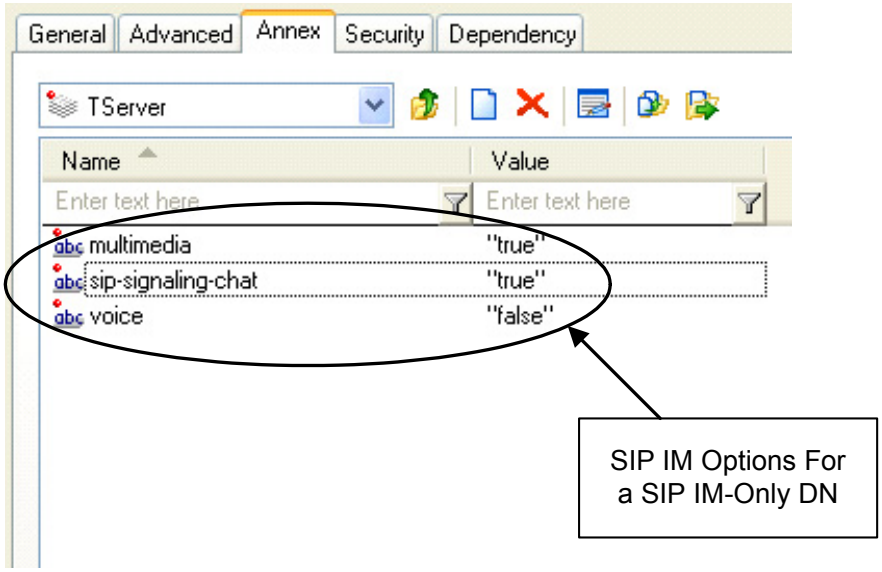

Figure 5: Sample of Options for a DN That Handles SIP IM Only

End of procedure

Next Steps

- Assign DNs according to the business needs of your contact center. See "Variations of DNs and Media for Agents."

Variations of DNs and Media for Agents

This section describes some of the media/DN/server relationships supported for the Genesys IM Solution. See "Enabling DNs to Handle Instant Messaging" on page 24 for instructions on how to configure an IM DN itself. All the scenarios described here apply both to Genesys Desktop and to customized agent desktop deployments. In all these cases, the DNs referred to are `Extension` object DNs in the Configuration Layer.

Background

Your contact-center business logic may require one of the following rules: an agent handles both IMs and voice interactions; an agent handles only one media type at a time; or an agent handles multiple IM interactions at a time. These types of rules can be applied in the Agent Capacity Rules you assign, for instance, to an agent, a place, or a tenant. ("Assigning a Capacity Rule" on page 33 briefly describes this. See the *Genesys 7.6 Resource Capacity Planning Guide* for full details on designing and configuring capacity rules.)

Note: The name of the capacity rule `mediatype` for handling IM is `chat`.

For instant messaging, you may have additional business needs as they apply to agents that are handling voice and instant messaging. You might require that an agent use a single DN for both types of interactions. (The example shown in "Configuring DNs to handle instant messaging" on page 24 has an illustration of that case.) Alternatively, you might need separate DNs for each media type, if, for instance, you have a traditional T-Server for voice but are using SIP Server for IM (as described below in "Two Separate DNs, Variation 2" on page 29).

To help understand how you might deploy some of these variations, three of the many possible scenarios are described here:

- "One DN for Both Voice and IM" shows the scenario of one DN handling interaction-control for both SIP voice and T-Library IM, and for the text of the T-Library IM. This is a scenario you might deploy if you use SIP Server and Genesys Desktop for both voice and IM (but that can also be used with a custom desktop).
- "Two Separate DNs, Variation 1" describes the use of a single SIP Server that provides two DNs per agent: one for SIP voice interaction control, and one for T-Library IM interaction control and for the IM text itself.

- "Two Separate DNs, Variation 2" on page 29 illustrates the use of two DNs per agent as well. In this scenario, each DN is associated with a distinct media device. In this way, you can use one DN for IM interaction control and for text from a SIP Server, and you can use the other DN for voice interaction control through either a SIP Server or traditional T-Server.

Refer to Genesys Reporting documentation and the *Stat Server Release Note* for issues related to how IMs are tracked in your contact center.

One DN for Both Voice and IM

Figure 6 illustrates agent-DN connectivity where a single DN is handling both voice and IM interaction control, plus the text of the IM. In this case, each agent's DN is configured with both the appropriate SIP voice configuration options, and with the three IM options outlined in "Enabling DNs to Handle Instant Messaging" on page 24. In this scenario:

- `multimedia` is set to `true`.
- `sip-signaling-chat` is set to `false` (to force the use of T-Library for IM).
- `voice` is set to `true`.

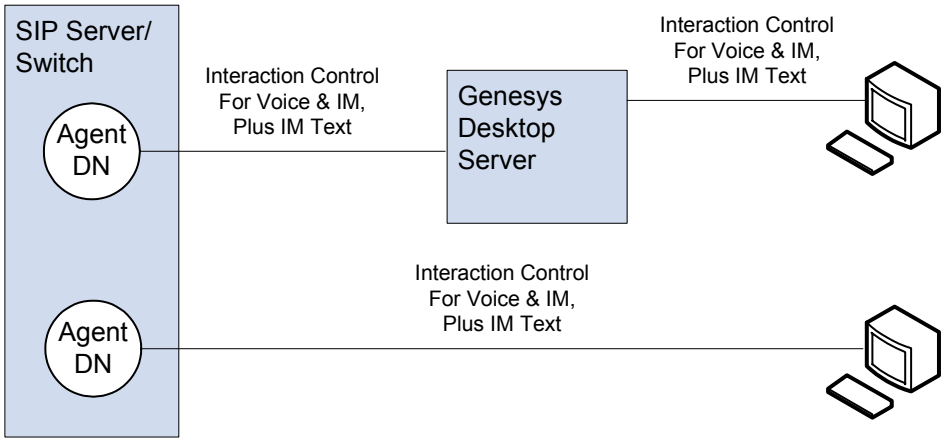

Figure 6: A Single DN for Voice and IM Interaction Control, and for the IM Text

Two Separate DNs, Variation 1

Figure 7 illustrates agent-DN connectivity, where a given DN handles interaction control for only one media type, either voice or IM. Additionally, this scenario uses only a SIP Server/switch for both types of DNs. In this case, each agent connects to two DNs: one DN is configured with the appropriate SIP voice configuration options, and the other has only the three instant messaging options outlined in "Enabling DNs to Handle Instant Messaging" on page 24. In this example, the IMs are arriving at the desktop over T-Library. The following settings apply to this scenario:

Options for IM DN

- `multimedia` is set to `true`.
- `sip-signaling-chat` is set to `false` (to force the use of T-Library for IM).
- `voice` is set to `false` (making this an IM-only DN).

Options for Voice DN

- `multimedia` is set to `false`.
- `sip-signaling-chat` is set to `false`.
- `voice` is set to `true` (or is absent).

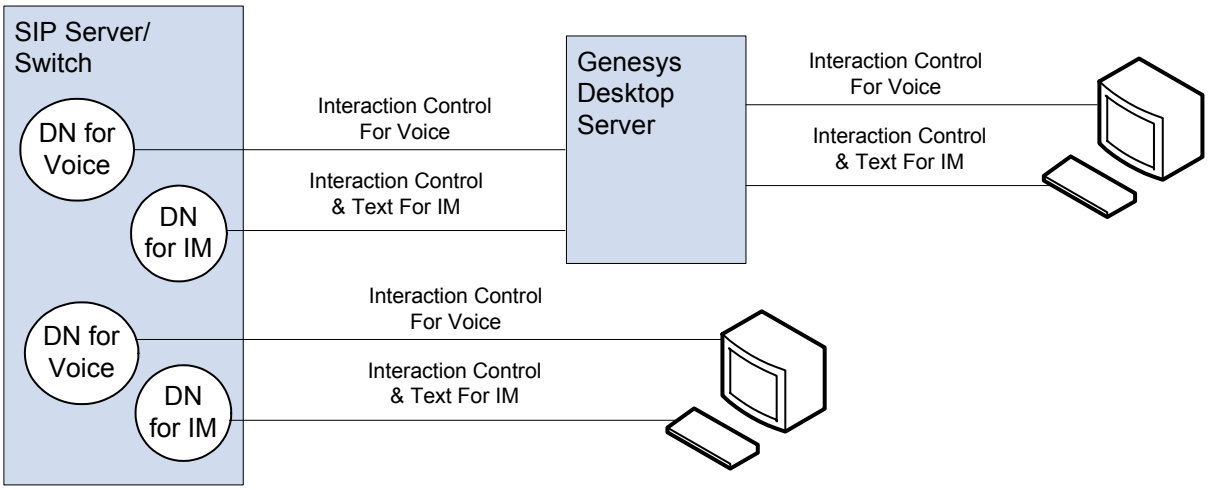

Figure 7: One DN for Voice Interaction Control and One for IM Interaction Control and Text, Example 1

Two Separate DNs, Variation 2

Figure 8 illustrates agent-DN connectivity where a given DN handles interaction control for only one media type, either voice or IM. In this case, however, a SIP Server/switch is deployed to handle only the IM DNs and their text, and a traditional T-Server (or a separate SIP Server) is used for control of the voice interactions. Here, each agent connects to two DNs. For voice, the agent uses the T-Server (or separate SIP Server) `Switch` object DN that is configured with the appropriate voice configuration options. The agent also connects to a DN on the separate SIP Server's associated `Switch` object that has only the three IM options, as outlined in "Enabling DNs to Handle Instant Messaging" on page 24. In this example the IMs are arriving at the desktop over T-Library. The following settings apply to this scenario:

Options for IM DN

- `multimedia` is set to `true`.

- `sip-signaling-chat` is set to `false` (to force the use of T-Library for IM).
- `voice` is set to `false` (making this an IM-only DN).

Options for Voice DN (Not Applicable for a Traditional T-Server)

- `multimedia` is set to `false`.
- `sip-signaling-chat` is set to `false`.
- `voice` is set to `true` (or is absent).

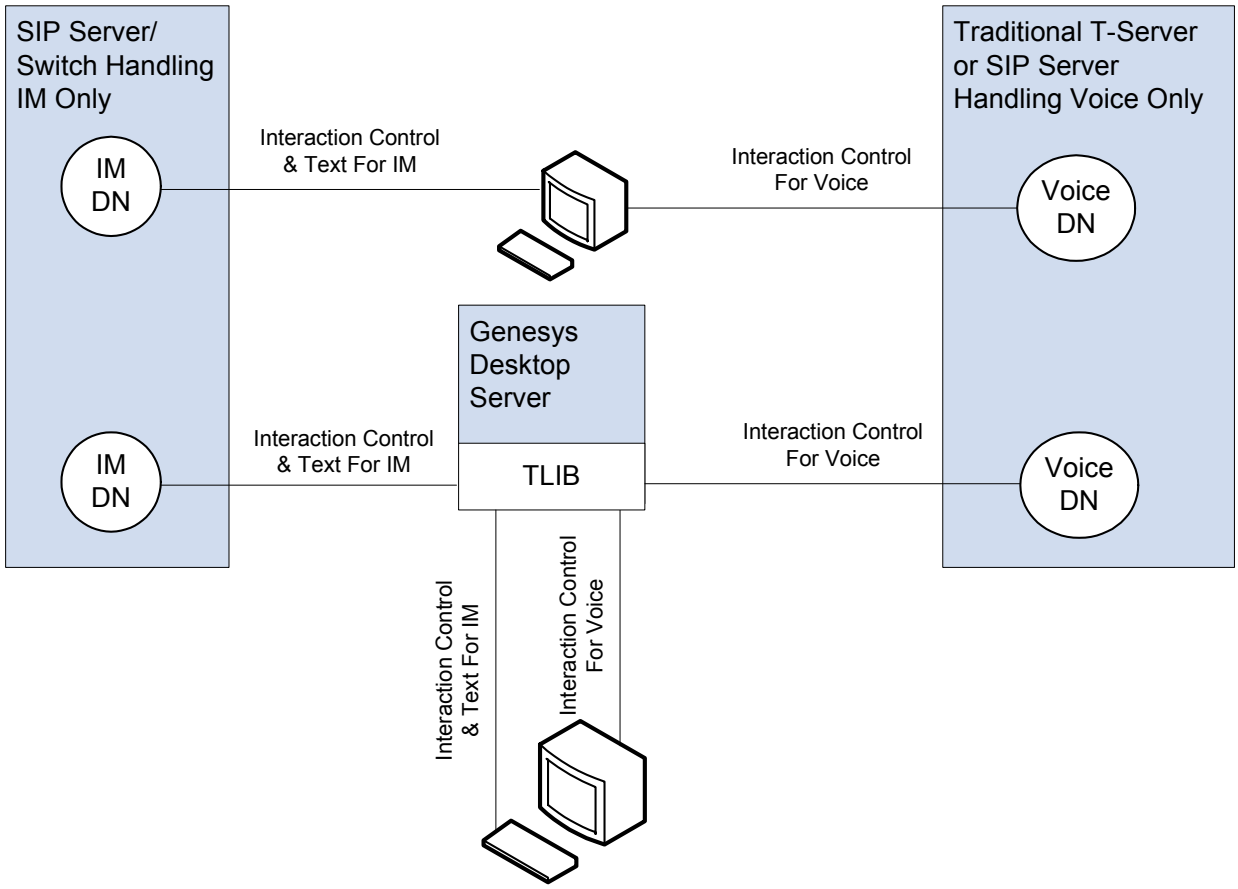

Figure 8: One DN for Voice Interaction Control and One for IM Interaction Control and Text, Example 2 (Two Separate Media Servers)

Configuration Options

The following DN configuration options, set in the `TServer` section on the `Annex` tab of DNs in the `Switch` object related to your SIP Server, pertain to the IM Solution.

DN Options for IM

multimedia

Default Value: `false`
Valid Values: `true, false`
Changes Take Effect: After Stat Server restart

When set to `true,` indicates that this SIP Server-related DN is capable of handling IM interactions (in addition to whatever other capabilities are set for it). When set to `false,` URS will not deliver IMs to this DN. Set this option to `true` for a DN that is related to SIP Server when you want it to be able to handle IMs.

sip-signaling-chat

Default Value: `true`
Valid Values: `true, false`
Changes Take Effect: Immediately

When set to `true,` indicates to SIP Server that instant messages delivered to this DN should be handled using standard SIP messaging. To implement the IM Solution with T-Library (`TLIB`) support, set this option to `false.` Setting this option to `false` tells SIP Server to pass instant messages using the T-Library protocol (and an `Extension` of `EventPrivateInfo`), and ensures that agent desktop applications that are built to connect to Genesys T-Servers (including SIP Server), and that are capable of displaying text messages, need no further configuration in order to handle IM.

voice

Default Value: `true`
Valid Values: `true, false`
Changes Take Effect: After Stat Server restart

When set to `true,` indicates that this SIP Server-related DN is capable of handling voice interactions (in addition to whatever other capabilities are set for it). Set this option to `false` for DNs that are intended for IM-only interaction handling.

Chapter

3 Delivering and Handling Instant Messages

This chapter identifies considerations for using capacity rules, Universal Routing Server (URS) strategies, and agent desktops, including Genesys Desktop, in a Genesys Instant Messaging (IM) Solution that includes SIP Server. This chapter has the following sections:

Before You Begin

This chapter assumes that you are using SIP Server to handle instant messages and that you have successfully installed and configured your agent desktop, which could be Genesys Desktop, to handle voice interactions. This chapter provides information about specific additional configuration settings that are required to have an installed agent desktop deployment accommodate instant messaging.

For information about installing and configuring Genesys Desktop itself, see the *Genesys Desktop 7.6 Deployment Guide* and other resources listed in "Related Resources" on page 8.

Assigning a Capacity Rule

In order to ensure that your agents can receive IM interactions, you need to assign them a capacity rule that allows them to handle interactions of type `chat` media. Capacity rules can be assigned to agents at a number of levels, from the

tenant to the agents themselves. The Capacity Rule Wizard, accessible from Configuration Manager, allows you to design and set these rules. See the *Genesys 7.6 Resource Capacity Planning Guide* for details. Figure 9 shows a sample capacity rule. In the case of this particular rule, Stat Server will indicate to URS that agents assigned this rule should be delivered IM interactions only.

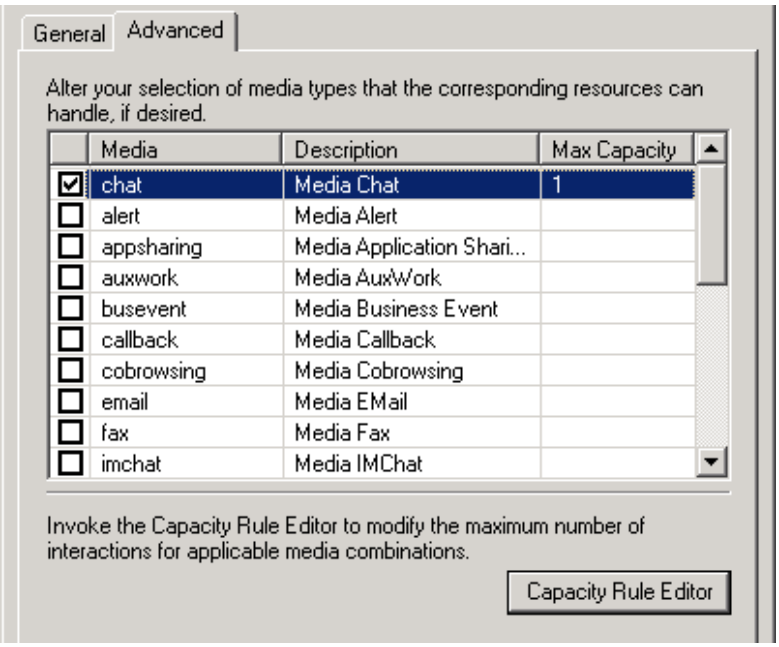

Figure 9: Sample Capacity Rule Allowing an Agent to Handle IMs Only

Additionally, be sure that the URS `Application` object option `use_agent_capacity` is set to `true`. Doing so ensures that URS checks with Stat Server on the capacity rule associated with a given resource.

Designing a Routing Strategy for IM

SIP Server treats IMs the same way it handles calls. IMs, like calls, are sent to a routing point, making URS an important component in getting those interactions to your agents. Among other things, you can have URS apply agent-based and skill-based routing for your IMs, and URS can collaborate with Stat Server to consider capacity rules when you set the URS `Application` object `use_agent_capacity` option to `true`. In using URS to handle IMs, take note that you can have URS apply treatments to those instant messages as part of the IM Solution.

This section briefly discusses IMs in the context of URS, and how to set up an IM-appropriate routing strategy—one that includes URS treatments. The *Framework 7.6 SIP Server Deployment Guide* has more details on the use of treatments for IM, and the *Universal Routing 7.6 Reference Manual* has full details on all URS features.

Media Segmentation

Prior to applying a treatment to your IM or delivering it to an agent, to ensure that URS properly distinguishes a SIP-initiated voice interaction from an IM, you should do one of the following:

- Give the value `extension` to the URS option `use_dn_type`.
- If setting the URS option `use_dn_type` to `extension` is not possible for your Genesys environment (perhaps due to some constraint from other routing scenarios), use a routing strategy to have URS determine the `MediaType` of the incoming interaction (`TMediaChat` for IM, since IM and chat are the same from a URS perspective). Then apply `UseMediaType` to the IM interaction to route it to a DN.

Note: If you do not perform media segmentation in your routing strategy, in certain cases URS may deliver a SIP voice interaction to a DN that is set up for IM handling.

Applying Treatments

The IM Solution lets you apply a select group of treatments for IMs that arrive at the routing point. The following treatments are supported for IM routing in your strategies:

- Play Announcement.
- Collect Digits.
- Play Announcement and Collect Digits.

A routing strategy for IMs that uses these treatments might include something similar to that shown in Figure 10. That strategy finds out something about the interaction and sends an appropriate message to the initiator of the IM.

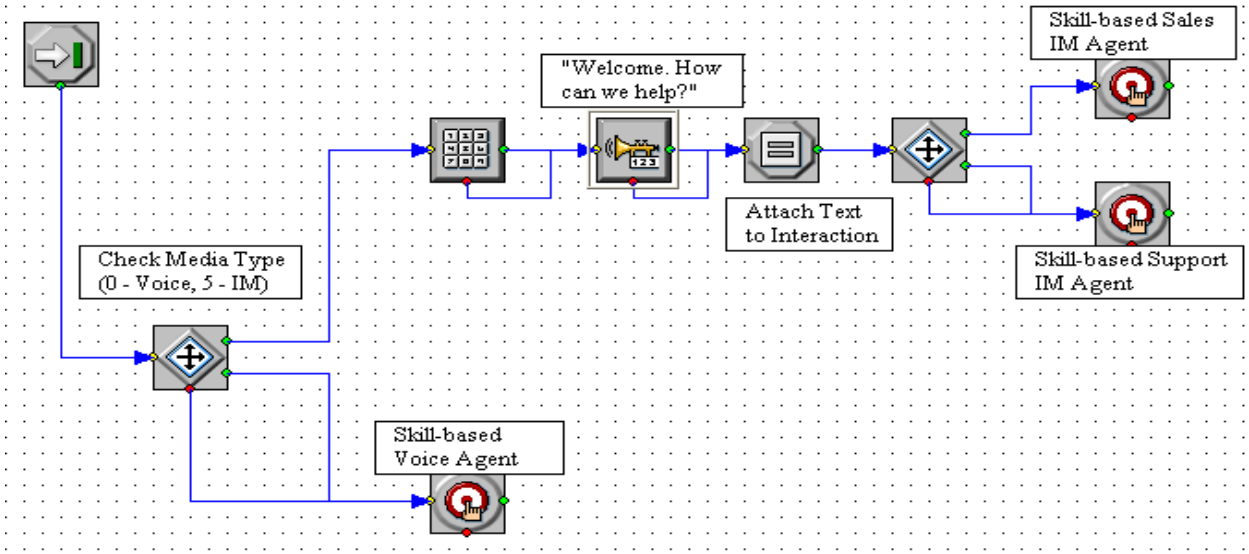

Figure 10: Routing Strategy with Media Segmentation and Treatments for IM Interactions

In the case of an IM, collecting digits is a matter of storing the entire contents of the text sent. (The only applicable parameter is `TOTAL_TIMEOUT`.) After collecting the "digits," you can work with the text by assigning it to variables and storing it in attached data. Figure 11 shows the parameter values of a `Collect Digits` routing object used for IM.

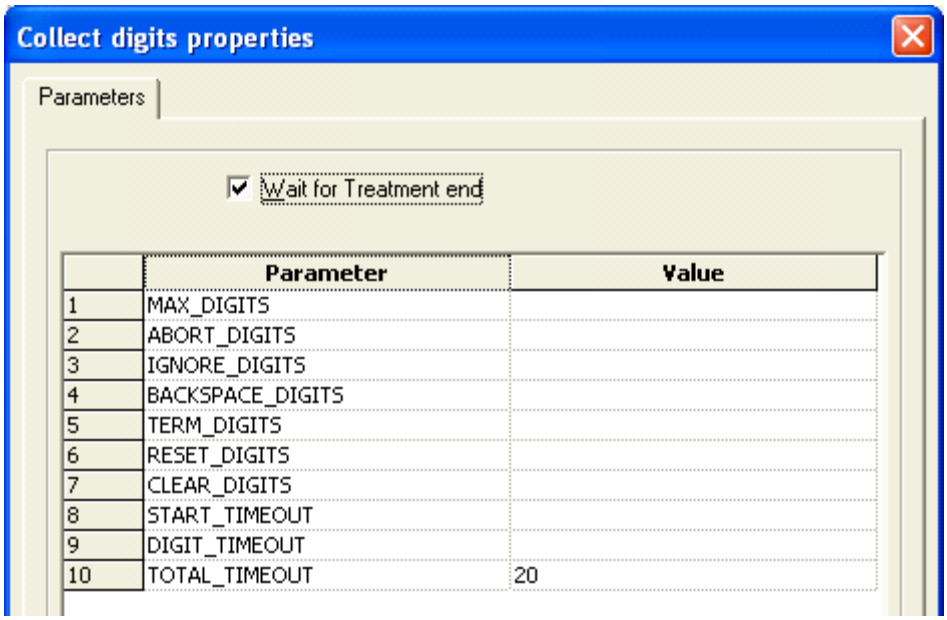

	Parameter	Value
1	MAX_DIGITS	
2	ABORT_DIGITS	
3	IGNORE_DIGITS	
4	BACKSPACE_DIGITS	
5	TERM_DIGITS	
6	RESET_DIGITS	
7	CLEAR_DIGITS	
8	START_TIMEOUT	
9	DIGIT_TIMEOUT	
10	TOTAL_TIMEOUT	20

Figure 11: Getting the Text of an IM Interaction: Collecting the "Digits"

Note: Genesys recommends that you start treatments in your IM routing strategy with "digits" collection so you can store the details of the customer's first IM.

Playing an announcement for an IM is a matter of sending an automated text message. Figure 12 illustrates how the `Play Announcement` routing object might be used to respond to an incoming IM with text of your own.

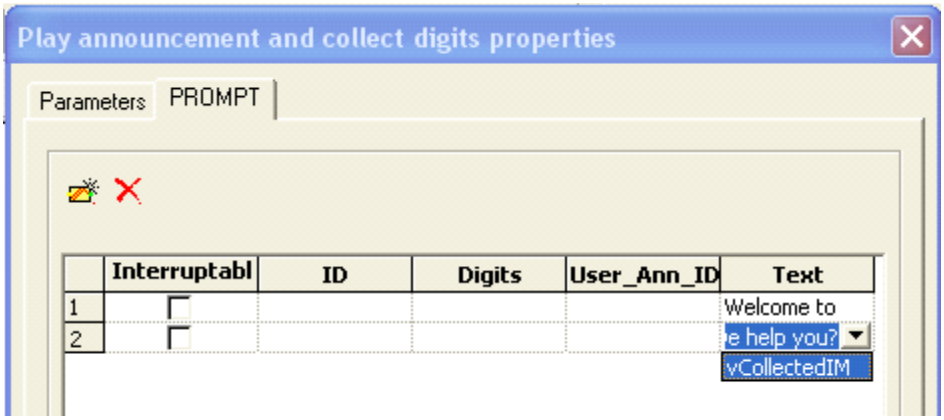

Figure 12: Using the Play Announcement Object to Handle an IM Interaction

General Considerations for Routing an Instant Message

Apart from the ability to apply treatments, there are two general principles to keep in mind when designing your URS strategy so you can deliver instant messages to agents.

The first is that, for URS purposes, the media type for instant messages is `TMediaChat`, with an interaction type value of `5`. This allows you to segment your instant message interactions distinctly from voice, as called for by your business logic. The routing strategy shown in Figure 10 on page 36 does this, for instance.

The second thing to keep in mind is that instant messages are delivered using the standard voice-media `Selection` object for targeting agents. That is, you can implement your instant messaging strategy in a way similar to that of your voice strategies by targeting agent groups, place groups, skill sets, agents, places, or skills.

Review the Universal Routing documentation, as noted in "Related Resources" on page 8, for details on implementing strategies for IM.

Integrating with SIP Server

Since this document assumes you have already configured your desktop application to handle voice interactions delivered by SIP Server, there is no further configuration you need to perform for the delivery of instant messages.

The connection you have set up between your desktop application and SIP Server provides the necessary communication for SIP Server to deliver the instant messages.

Reporting IM Activity in Your Contact Center

This release supports reporting for instant messaging. You can report on IM handling in your contact center for both real-time and historical reports. All guidelines for reporting on instant messaging provided here assume that you already have Genesys Reporting as part of your overall Genesys deployment. For details on how to configure and deploy any specific aspect of Genesys Reporting, see the Stat Server and Reporting documentation (page 9).

Note: Your ability to report on IMs is restricted to media-based reporting and not, for instance, agent–state-based reporting (in which case, reporting for IM work would not be independent from reporting for voice-related work).

Procedure: Configuring real-time reporting for IMs

Purpose: For your existing real-time Genesys Reporting environment, implementing this procedure allows you to generate real-time reports on instant messages (media-based reporting).

Prerequisites

- Prior to taking the following steps, you should have a real-time Genesys Reporting environment in place, including the CCPulse component.

Start of procedure

1. From the `Options` tab of your Stat Server `Application` object in Configuration Manager:
   a. Import `StatProfile.cfg` from among the Reporting templates located in the `solution_specific\voice\templates\realtime` directory on your Reporting Templates product disk.

   b. `Filters` is now present among your Stat Server `Sections`. Under `Filters`, create a new option, a filter that will allow the system to report on instant messages, with the following name and value:

   Name: `Chat`

   Value: `MediaType=chat`

2. Using CCPulse, import into your template storage the following templates from `Templates.stg`, located on your Reporting Templates disk in the `solution_specific\voice\templates\realtime` directory:

   `Resource Voice Handling` and `Voice Queue Report`.

3. Still in CCPulse, based on `Resource Voice Handling`, create new templates:

   `Resource Chat Handling` and `Chat Queue Report`.

4. In your new templates, replace the filter `VoiceCall` with your new `Chat` filter.

End of procedure

Next Steps

- Configure your system to allow for historical reporting on instant messages, "Configuring historical reporting for IMs".

Procedure: Configuring historical reporting for IMs

Purpose: For your existing historical Genesys Reporting environment, you need to make changes similar to the following to generate historical reports on instant messages. The changes in this case focus on copying and converting voice media layout templates so that they work for reporting on IMs (chat media).

Prerequisites

- Prior to taking the following steps, you should have an historical Genesys Reporting environment in place.

Start of procedure

1. Select and copy any voice media layout templates you want to use for IM to a separate directory where you can convert them.
2. In the separate directory, rename the template files, changing `VOICE` to `CHAT` in every instance. For example, rename `VOICE_A.xml` to `CHAT_A.xml`.

3. Inside each of the `.xml` files make the following changes:
   a. For the attribute `TemplateName`, change any value of `VOICE` to `CHAT`. For example, change `TemplateName ="VOICE_AG"` to `TemplateName ="CHAT_AG"`.
   b. For the attribute `LayoutName`, change any value of `Voice` to `Chat`. For example, change `LayoutName="Voice Handling Agent Group"` to `LayoutName="Chat Handling Agent Group"`.
   c. Make the following changes to the attributes listed under the attribute `ParameterKey="Filter"`:

      Change `ParameterName="VoiceCall"` to `ParameterName="Chat"`.

      Change `ParameterDefinition="MediaType=voice"` to `ParameterDefinition="MediaType=chat"`.
   d. For all instances where the string `VOICE` is part of the value of an attribute that is the name of a statistic, change that portion of the value to `CHAT`. For example, change

      `VOICE_<remaining_portion_of_statistic_name>` to

      `CHAT_<remaining_portion_of_statistic_name>`.
   e. For all `StatType` elements, replace `voice` with `chat` in both the `Description` element and in the value of its `StatTypeDefinition` attribute.
   f. Check for any further occurrences of `voice` in the file. For any that remain, correct them as appropriate.
   g. Change the `IsCustom` attribute value from `No` to `Yes`.
4. Proceed normally with historical reporting, now using the new layout templates you created.

End of procedure

Next Steps

- Proceed to “Configuring the Desktop” on page 40 to ensure that IMs can reach your agents.

Configuring the Desktop

A given desktop is either capable of handling instant messages or it is not. If it is, there is very little you need to do to allow your agents to receive and handle instant messages. A desktop can accommodate instant messages if the agent’s or place’s related capacity rule permits IM interactions to arrive at the desktop, and an instant-messaging-enabled DN is available for the place where the agent logs in. In this case, SIP Server delivers instant messages as it does for voice or video. (See “Configuring Switch Object Resources” on page 24 for DN configuration details.)

If you intend to have your agents handle instant messages at the Genesys Desktop, the capability to handle this interaction type is available upon initial deployment. You can tune your Genesys Desktop Server IM capabilities with the options in the `instant-messaging` section of your Genesys Desktop `Application` object in the Configuration Layer. That section includes options such as `agent-wait-interval`, `auto-spell-check`, and `customer-wait-interval`. See the *Genesys Desktop 7.6 Deployment Guide* for details.

Note: The Genesys Desktop Server's `media` option in the `multimedia` section of its `Application` object includes the `chat` value by default. You should remove this value if you intend to have SIP-based IM, and not Multimedia Chat, in your Genesys deployment.

Genesys Desktop also provides the additional customer-support tools you expect for an interaction of any media type, including access to your standard response library and support for supervisor monitoring.

Logging In at the Genesys Desktop

Agent login at the desktop will differ in minor ways procedurally, depending on how you have configured the DNs your agent intends to use.

If your agents handle only IM on their DNs, or use a single DN for both voice and IM, the login will be almost identical to what it is for voice alone. (For the Genesys Desktop, the user will see "voice, IM" instead of just "voice" when supplying the DN information.) Figures 13, 14, and 15 show the Genesys Desktop login screen for DNs and places with various media capabilities. Genesys Desktop indicates whether IM, voice, or both are available for the selected DN and place.

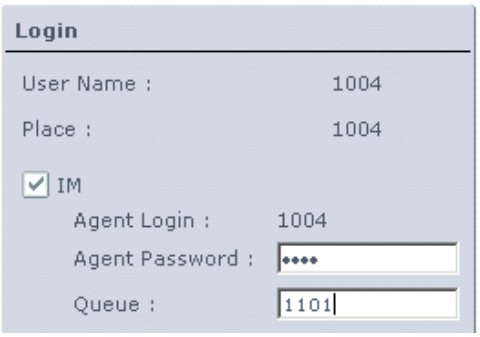

Figure 13: Genesys Desktop Login Screen for an IM-Only DN

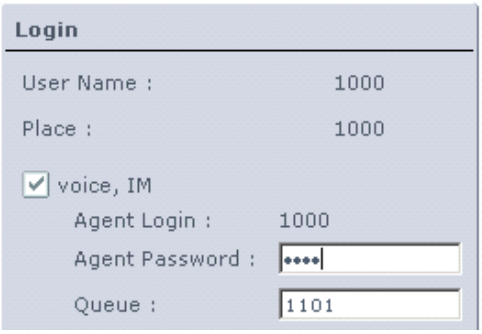

Figure 14: Genesys Desktop Login Screen for an IM-Plus-Voice DN

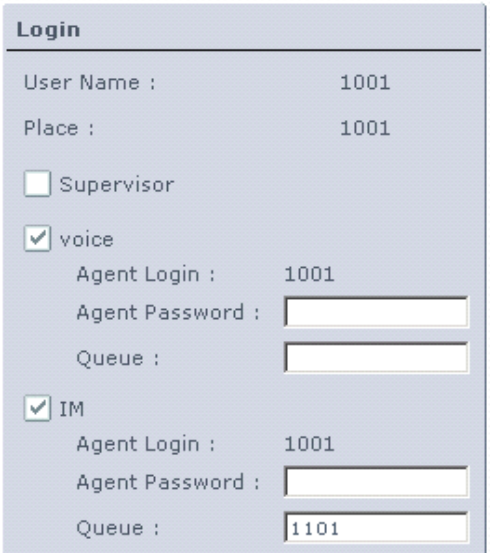

Figure 15: Genesys Desktop Login Screen for a Place with Two DNs: One for Voice and One for IM

As Figure 15 indicates, if your agents use separate DNs for voice and IM, they will need to supply the particular login information for each DN separately. “Variations of DNs and Media for Agents” on page 27, describes in detail these means of connectivity.

Note: Genesys Desktop also provides the additional customer-support tools you expect for an interaction of any media type, including access to your standard response library and support for supervisor monitoring.

Agent Login as Nickname

SIP Server uses the value of `Agent Login` (visible in Figures 13, 14, and 15 on page 41) as an agent’s nickname in IM exchanges with customers. This `Agent Login` value is taken from the `Code` field of the `Agent Logins` for the `Switch`

object associated with your SIP Server in the Configuration Layer. For IMs that your agents send to customers, SIP Server adds `[<agent_nickname>/<agentID>]` at the start of the message. Take this SIP Server practice into consideration when setting your `Agent Login` values.

Chapter

4 Instant Messaging in the Logs

This chapter gives you some insight into how SIP Server handles a SIP instant message. The log file snippet included here is captured from an actual instant message transaction. This chapter includes the following section:

Sample Instant Message Log File

The log file snippet shown later in this section is from a SIP Server that has been asked to pass an instant message to a routing point, in the logs: `sip:1111@172.21.27.97`. In this example, you can see that the initial part of the log shows SIP Server's SIP stack messaging. The actual text message, "test," is on its own, separate line, shown here:

```
Content-Type: text/plain
Content-Length: 4

test
10:49:07.130 SIPDLG[3]: register TRN[5]
```

This message was routed to an agent at the Genesys Desktop who was not using a SIP endpoint. SIP Server moved the text of the message to the `Extensions` attribute of T-Library's `EventPrivateInfo`. In that way, it was able to communicate with the agent desktop as it would with any of its Genesys clients, receiving T-Library requests and responding with T-Library events. In this case, the message was included as part of a key-value pair, with the key being `im` and the value being the text of the message itself, "test."

```
@10:49:07.2400 [0] 7.6.000.33 distribute_event:    message EventPrivateInfo
   AttributeEventSequenceNumber                    0000000000000071
```

```
AttributeTimeinuSecs                          240000
AttributeTimeinSecs                           1211305747 (10:49:07)
AttributeExtensions                           [13] 00 01 00 00..
                    'im'            'test'
AttributeOtherDN                              '1007'
AttributeDNIS                                 '1111'
```

The agent desktop, in this case Genesys Desktop, was able to handle the interaction as an instant message because SIP Server identified it as such with the `MediaType` attribute:

```
AttributeMediaType           5
```

Log File Snippet

```
10:49:07.130 SIPS:LOGBLOCK:BEGIN:SIPDATA:[
10:49:07.130 Received [284,UDP] 438 bytes from 172.21.27.88:3234
<<<<<
MESSAGE sip:172.21.27.97:5561 SIP/2.0
Via: SIP/2.0/UDP 172.21.27.88:16540
Max-Forwards: 70
From: "Administrator"
<sip:1007@172.21.27.97:5561>;tag=2710b6e7573f440d8353c387157a339b;e
pid=13efaa8924
To: <sip:1111@172.21.27.97>;tag=5FAA3F5B-A3C5-4508-B055-
8D7ED2AC61B3-2
Call-ID: 620c1166594847c6b826974fcbc21783
CSeq: 2 MESSAGE
Contact: <sip:172.21.27.88:16540>
User-Agent: RTC/1.3
Content-Type: text/plain
Content-Length: 4

test
10:49:07.130 SIPDLG[3]: register TRN[5]
10:49:07.130 SipDialog: event CONNECTED_REQUEST,5,0196fb84
10:49:07.130 SIPCONN(1007): HandleSipDialogEvent(CONNECTED_REQUEST)
@10:49:07.2400 [0] 7.6.000.33 distribute_event: message
EventUserEvent
   AttributeEventSequenceNumber000000000000006f
   AttributeTimeinuSecs240000
   AttributeTimeinSecs1211305747 (10:49:07)
   AttributeExtensions[13] 00 01 00 00..
      'im''test'
   AttributeOtherDN'1007'
   AttributeDNIS'1111'
   AttributeUserData[535] 00 15 00 00..
      'RVQID'''
      'RTargetTypeSelected''2'
      'RTargetRuleSelected'''
      'RTargetObjectSelected''All_Agents'
      'RTargetObjSelDBID''105'
```

```
      'RTargetAgentSelected''1001'
      'RTargetPlaceSelected''1001'
      'RTenant''Resources'
      'RStrategyName''Any Available Agent 2'
      'RStrategyDBID''329'
      'CBR-actual_volume'''
      'CBR-Interaction_cost'''
      'CBR-contract_DBIDs'''
      'CBR-IT-path_DBIDs'''
      'RRequestedSkillCombination'''
      'RRequestedSkills'(list)
      'RTargetRequested''All_Agents'
      'CustomerSegment''default'
      'ServiceType''default'
      'ServiceObjective'''
      'PegAGAll_Agents'1
   AttributeCallUUID'DH1EU3844T1J33QUSEEJDHMHBC000003'
   AttributeConnID006b0192cae0f001
   AttributeCallID1
   AttributeCallType1
   AttributeCallState0
   AttributeMediaType5
   AttributeUserEvent[2001]
   AttributeThisDN'gcti::im'
@10:49:07.2400 [ISCC] Translate: '' -> ''; result 1 ()
10:49:07.240 Int 04544 Interaction message "EventUserEvent"
generated
10:49:07.240 Trc 04542 EventUserEvent sent to [336] (00000006
Stat_Server_760 172.21.27.97:3622)
@10:49:07.2400 [0] 7.6.000.33 distribute_event: message
EventPrivateInfo
   AttributeEventSequenceNumber0000000000000070
   AttributeTimeinuSecs240000
   AttributeTimeinSecs1211305747 (10:49:07)
   AttributeExtensions[13] 00 01 00 00..
      'im''test'
   AttributeOtherDN'1007'
   AttributeDNIS'1111'
   AttributeUserData[535] 00 15 00 00..
      'RVQID'''
      'RTargetTypeSelected''2'
      'RTargetRuleSelected'''
      'RTargetObjectSelected''All_Agents'
      'RTargetObjSelDBID''105'
      'RTargetAgentSelected''1001'
      'RTargetPlaceSelected''1001'
      'RTenant''Resources'
      'RStrategyName''Any Available Agent 2'
      'RStrategyDBID''329'
      'CBR-actual_volume'''
      'CBR-Interaction_cost'''
      'CBR-contract_DBIDs'''
```

```
      'CBR-IT-path_DBIDs'''
      'RRequestedSkillCombination'''
      'RRequestedSkills'(list)
      'RTargetRequested''All_Agents'
      'CustomerSegment''default'
      'ServiceType''default'
      'ServiceObjective'''
      'PegAGAll_Agents'1
   AttributeCallUUID'DH1EU3844T1J33QUSEEJDHMHBC000003'
   AttributeConnID006b0192cae0f001
   AttributeCallID1
   AttributeCallType1
   AttributeCallState0
   AttributeMediaType5
   AttributePrivateMsgID3001
   AttributeThisDN'1007'
@10:49:07.2400 [ISCC] Translate: '' -> ''; result 1 ()
10:49:07.240 Int 04544 Interaction message "EventPrivateInfo"
generated
10:49:07.240 Trc 04542 EventPrivateInfo sent to [336] (00000006
Stat_Server_760 172.21.27.97:3622)
10:49:07.240 Trc 04542 EventPrivateInfo sent to [312] (00000005
Interaction_Concentrator_760 172.21.27.97:3497)
@10:49:07.2400 [0] 7.6.000.33 distribute_event: message
EventPrivateInfo
   AttributeEventSequenceNumber0000000000000071
   AttributeTimeinuSecs240000
   AttributeTimeinSecs1211305747 (10:49:07)
   AttributeExtensions[13] 00 01 00 00..
      'im''test'
   AttributeOtherDN'1007'
   AttributeDNIS'1111'
   AttributeUserData[535] 00 15 00 00..
      'RVQID'''
      'RTargetTypeSelected''2'
      'RTargetRuleSelected'''
      'RTargetObjectSelected''All_Agents'
      'RTargetObjSelDBID''105'
      'RTargetAgentSelected''1001'
      'RTargetPlaceSelected''1001'
      'RTenant''Resources'
      'RStrategyName''Any Available Agent 2'
      'RStrategyDBID''329'
      'CBR-actual_volume'''
      'CBR-Interaction_cost'''
      'CBR-contract_DBIDs'''
      'CBR-IT-path_DBIDs'''
      'RRequestedSkillCombination'''
      'RRequestedSkills'(list)
      'RTargetRequested''All_Agents'
      'CustomerSegment''default'
      'ServiceType''default'
```

```
      'ServiceObjective'''
      'PegAGAll_Agents'1
   AttributeCallUUID'DH1EU3844T1J33QUSEEJDHMHBC000003'
   AttributeConnID006b0192cae0f001
   AttributeCallID1
   AttributeCallType1
   AttributeCallState0
   AttributeMediaType5
   AttributePrivateMsgID3001
   AttributeThisDN'1001'
@10:49:07.2400 [ISCC] Translate: '' -> ''; result 1 ()
10:49:07.240 Int 04544 Interaction message "EventPrivateInfo"
generated
10:49:07.240 Trc 04542 EventPrivateInfo sent to [344] (00000007
Genesys_Desktop_760 172.21.27.97:3708)
10:49:07.240 Trc 04542 EventPrivateInfo sent to [336] (00000006
Stat_Server_760 172.21.27.97:3622)
```

Index

N

O

R

S

T

U

V